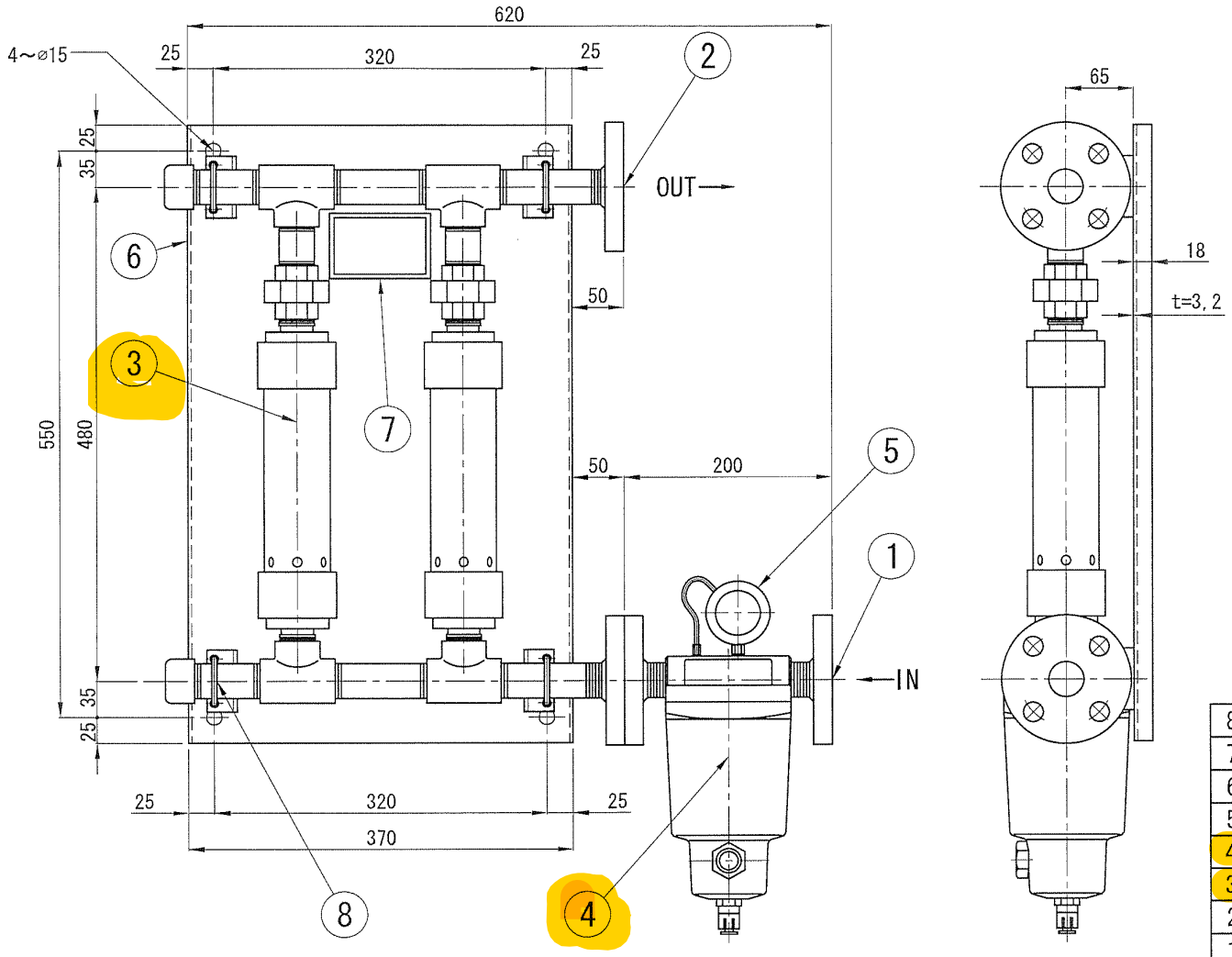

PAINT : 7.5BG-7/2
IN/OUT FLANGE : 10K-25A

NO	PART	MATERIAL	Qua
8	U BOLT & NUT	SS400	4
7	NAME PLATE		1
6	SETTING PLATE	SS400	1
5	DIFFER' PRESS. G		1
4	MIST SEPARATOR	SMC AM450	1
3	DRYER MODULE	SWB-15-150/EXA	2
2	OUTLET FLANGE	SS400	1
1	INLET FLANGE	SS400	1

SCALE :	FREE	CHECKED BY	T.M
DATE :	AUG 13 2009	DRAWN BY	K.M
SHIP No.		DRAWING No.	AD-6100011

CONTROL AIR DRYER UNIT YCA-100

EXENO YAMAMIZU CORPORATION