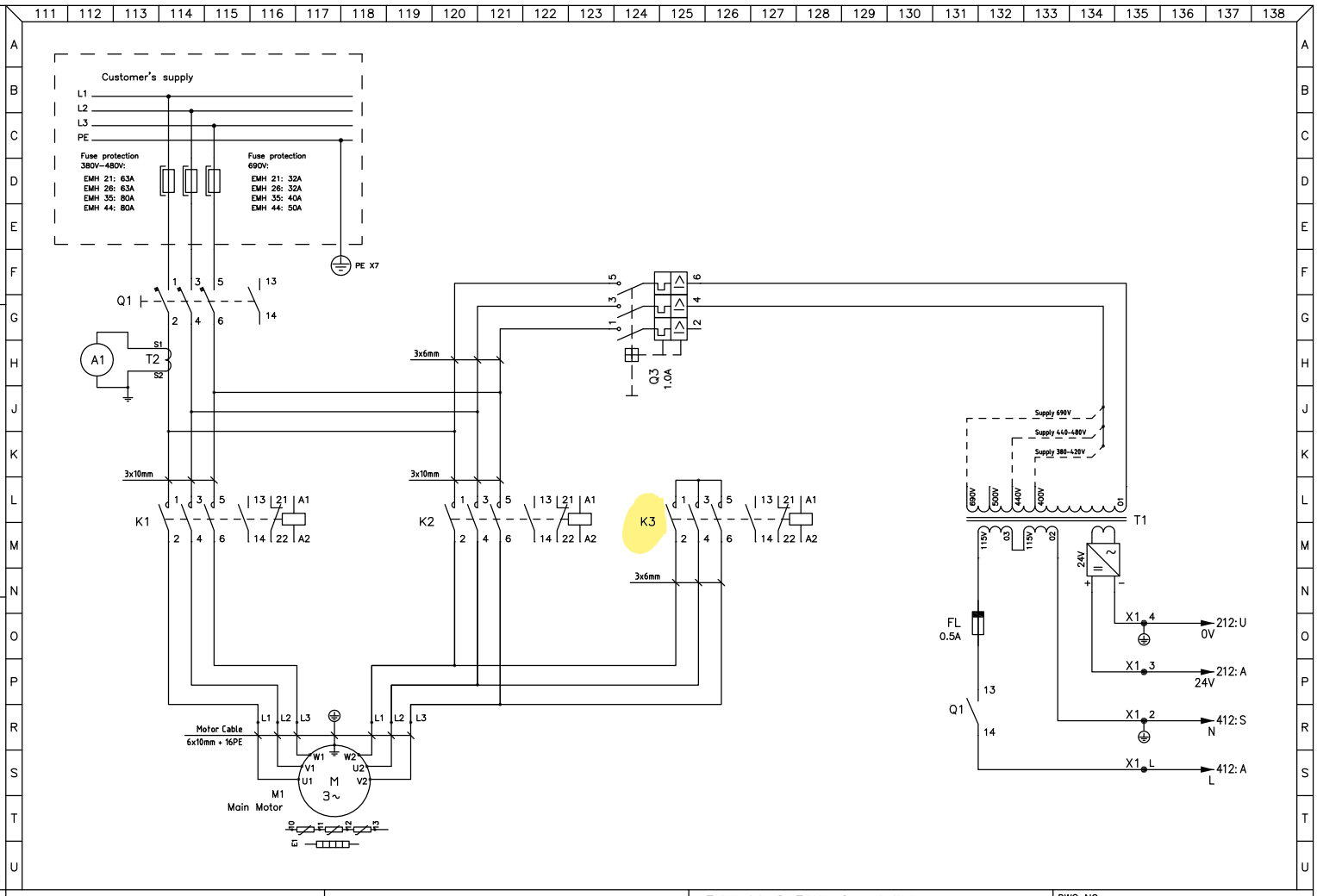

REVISION			
	TAMROTOR MARINE COMPRESSORS	SLS Shipbuilding Hull S544–551 Replaces prev. sent drawing	EMH 44–8 EANA Smartpilot 440V/60Hz Service Air Compressor Main Circuit Diagram

DWG NO.	10565–E–0611		
DESIGNED	SPA	DATE	27.11.2008
APPROVED	SB	DATE	23.03.2011
ID CODE	4–307150–A	SHEET	1/8